RIDGE TILLAGE SYSTEMS

WATER QUALITY IMPACTS IN FARMING SYSTEMS OF THE MIDWEST

WATER QUALITY

Management Systems Evaluation Areas

IDEA No. 7

RIDGE TILLAGE SYSTEMS:

WATER QUALITY IMPACTS IN FARMING SYSTEMS OF THE MIDWEST

Bruce Giebink

EDITOR

Bruce L. Giebink
Education Coordinator – MSEA Project
Department of Soil, Water and Climate
University of Minnesota Extension Service

This publication is based upon work supported by the Cooperative States Research, Education and Extension Service, U.S. Department of Agriculture, under special project No. USDA 94-EWQI-1-9054. It was produced through the Department of Soil, Water and Climate at the University of Minnesota, in cooperation with the Midwest Water Quality Initiative's Management Systems Evaluation Area (MSEA) projects in Iowa, Minnesota, Missouri, Nebraska and Ohio and *IDEA ~ Information Development • Expanding Awareness* at Iowa State University.

Any opinions, findings, conclusions or recommendations expressed in this publication are those of the author(s) and do not necessarily reflect the view of the U.S. Department of Agriculture.

Giebink, B.L. (Ed.). 1999. Ridge Tillage Systems: Water Quality Impacts In Farming Systems of the Midwest. *IDEA* # 7

Programs and activities of the Cooperative Extension Service are available to all potential clientele without regard to race, color, national origin, age, sex, religion, or disability.
Issued in furtherance of Cooperative Extension Work, Acts of May 8 and June 30, 1914, in cooperation with the U.S. Department of Agriculture. Katherine Fennelly, Director, University of Minnesota Extension Service, St. Paul, MN.

Copyright © 1999, Regents of the University of Minnesota. All rights reserved. Send copyright permission inquiries to: Copyright Coordinator, EDS, University of Minnesota, 405 Coffey Hall, St. Paul, MN 55108-6068, or email to copyright@mes.umn.edu or fax to (612) 625-2207.

… and justice for all
The U.S. Department of Agriculture (USDA) prohibits discrimination in all its programs and activities on the basis of race, color, national origin, gender, religion, age, disability, political beliefs, sexual orientation, and marital or family status. (Not all prohibited bases apply to all programs.) Many materials can be made available in alternative formats for ADA clients. To file a complaint of discrimination, write USDA, Office of Civil Rights, Room 326-W, Whitten Building, 14th and Independence Avenue, SW, Washington, DC 20250-9410 or call 202-720-5964.

Issued in furtherance of Cooperative Extension work, Acts of May 8 and June 30,1914, in cooperation with the U.S. Department of Agriculture. Stanley Johnson, director, Cooperative Extension Service, Iowa State University of Science and Technology, Ames, Iowa.

This publication was coordinated and produced by *IDEA - Information Development ~ Expanding Awareness*. *IDEA* provides services to increase the efficiency and effectiveness of developing, producing, and/or marketing educational products that involve multiple partners.

Through *IDEA*, the Cooperative Extension System's mission is to encourage and expedite collaboration among educators. Its publications are subject to peer review and prepared as part of cooperative extension activities in cooperation with the Cooperative State Research, Education and Extension Service (CSREES), U.S. Department of Agriculture, Washington, D.C.

TABLE OF CONTENTS

Management Systems Evaluation Areas 4

Can ridge tillage improve agricultural profitability while protecting the environment? 5

Ridge tillage is a conservation tillage system with unique water flow patterns 8

Fertility and weed management in ridge tillage systems 11

Equipment considerations for ridge tillage systems (planters and cultivators) 13

Overview of tillage systems compared at eight MSEA sites 15

Ridge tillage findings at the MSEA sites 16

- Minnesota, North Dakota and Wisconsin 16
- South Dakota 18
- Iowa 18
- Nebraska 19
- Ohio 19
- Missouri 20

Summary and recommendations 21

Concluding remarks 23

Contributors and contacts for further information ..... Back Cover

WATER QUALITY PROJECTS

OVERVIEW OF THE MSEA

MSEA Background

The impact of practices to produce crops, specifically the use of fertilizers and herbicides, has created concerns about the quality of our water resources. To address these concerns, the United States Department of Agriculture (USDA) initiated five comprehensive projects to evaluate and develop profitable cropping systems to safeguard our water resources. Known as Management Systems Evaluation Areas (MSEA), 10 study sites were established in Iowa (3 sites), Minnesota, Missouri, Nebraska, Ohio, North Dakota, South Dakota and Wisconsin.

The cornerstone of the MSEA program is the close integration of research and Extension education activities. This integration exists not only within each project, but also among the five states coordinating project efforts.

Ongoing research and educational programs among the projects continue to provide useful information to varied audiences, both inside and outside of the agricultural community. Since the initiation of the regional MSEA projects in 1990, combined efforts have provided more than 700 educational programs, disseminating information to some 50,000 users annually. These activities have increased awareness, demonstrated new and improved technologies and strategies, and encouraged adoption of cropping practices to reduce the impact on the region's water resources.

Management Systems Evaluation Areas

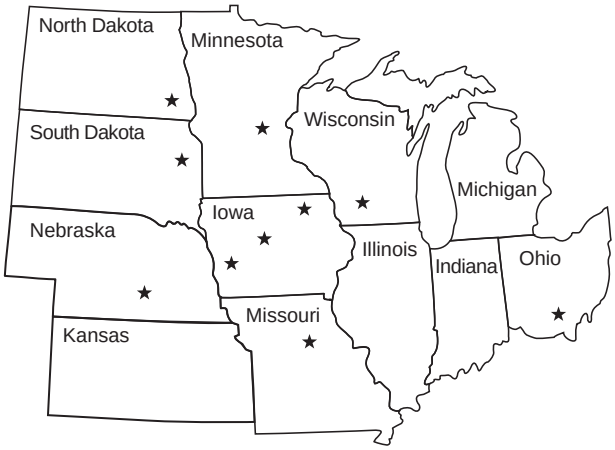

The USDA initiated five MSEA projects to evaluate and develop profitable cropping systems to safeguard our water resources. The main study sites were established in Iowa, Minnesota, Missouri, Nebraska, and Ohio. The sites, shown above, located in North and South Dakota, and in Wisconsin are coordinated through the Minnesota project.

IMPROVE PROFITABILITY

PROTECT THE ENVIRONMENT

Ridge tillage cropping systems provide many economic and environmental benefits, particularly on cold soils and where furrow irrigation is used. The MSEA project evaluated ridge tillage systems in eight Midwest states to determine their impact on water quality and profitability.

Can ridge tillage help us improve agricultural profitability while protecting the environment?

Today's agricultural producers are expected to balance profitability with protecting the environment. This means they must adopt and implement practices or cropping systems that not only increase agronomic stability but also enhance the environment. As a form of conservation tillage, ridge tillage has the potential to satisfy these rigorous requirements. Benefits include:

- Increased yields due to earlier warming of the seedbed, compared to no-till (especially on cold, poorly-drained soils of the Northern Corn Belt);
- Better water management (more infiltration, less runoff, less soil water evaporation), compared to conventional plowing;
- Less water and wind erosion due to crop residue on the soil surface;
- The ability to separate agrichemicals such as nitrogen fertilizers and pesticides from water pathways;
- Combines tillage with herbicides to control weeds, and thus reduces herbicide use compared to no-till;
- Controlled traffic—plants grow on ridges that are not driven on. This helps reduce compaction;
- Potentially more profitable because of sustained yields.

Some disadvantages are that ridge tillage:

- Is more labor intensive than no-till;
- Requires site-specific adjustments to planters and cultivators;

- Requires a planter with "ridge cleaning" devices and a heavy-duty cultivator (other machinery adjustments may include wheel spacing);
- Can pose adaptation problems for narrow-row, drilled crops.

Many researchers have demonstrated the agronomic advantages of ridge tillage in the Corn Belt, particularly on poorly-drained soils within the region. Most importantly, ridge tillage permits drainage and early warming of the seedbed and promotes faster growth to establish the crop. This translates to better yields; in most cases ridge tillage yields are higher or comparable to other tillage systems. Yet, despite these benefits, ridge tillage is used on only about 4 percent of the cultivated land in the Midwest, a figure that has changed very little over the past decade. Conversely, no-till acres steadily increased before leveling off. Moreover, ridge tillage is not widely dispersed, but found in small pockets where it has been used for the past 20 years (eastern Nebraska, western Iowa, and throughout Minnesota). Ridge tillage systems for growing corn and soybean are most common in Minnesota and Nebraska. In Minnesota, most of the ridge tillage acres consist of a corn-soybean rotation.

In Nebraska, most of the ridge tillage acres are continuous corn (in a furrow irrigation system). Nebraska farmers switch to ridge tillage for four reasons:

- Furrow irrigation (this is the primary reason why ridge tillage is so popular in Nebraska);
- Herbicide reduction;
- Helps poorly-drained, cold soils warm up more quickly; and
- Controls erosion.

Although the use of many other conservation tillage practices has increased, why has ridge tillage remained unchanged?

Compared to no-till and mulch till, ridge tillage requires different management inputs and specific machinery such as ridge cultivator, ridge planter and precise wheel spacing. In general, ridge tillage is more time and labor intensive than no-till. Ridge tillage systems require two cultivations, a primary factor limiting the size of a producer's operation. New herbicides made no-till easier, making cultivation even less popular. But no-till drilled soybean was probably the main reason why ridge tillage systems became less popular. No-till drilled soybean allowed producers to plant more acres more quickly because they could operate two planters at the same time (planter for corn and drill for soybean), rather than waiting to plant soybean until after all the corn is planted.

What about the environmental benefits of ridge tillage?

First and foremost, ridge tillage reduces pesticide load, which greatly reduces the risk of movement to either surface or ground water. In fact, ridge tillage systems can allow producers to go herbicide-free. At planting time, the planter removes weed seeds from the ridge and the cultivator takes care of weeds between the rows later on. Residue on and between the ridges protects the soil surface from both wind and water erosion. Less water running off a field has contributed greatly to improving the quality of surface water.

If ridge tillage increases infiltration in corn and soybean fields, will the risk to ground water also be increased?

It depends on:

- cropping sequence;
- the rate, timing and placement of nitrogen fertilizers or other water-soluble agrichemicals;
- the timing of precipitation; and
- whether worm tunnels, root channels and cracks (macropores) are present.

But the main reason why ridge tillage has such great potential to protect ground water is that it presents a unique opportunity to selectively place agrichemicals in the relatively dry ridge shoulder. This "dry zone" is created by water draining off the ridge and the leaf canopy. Two methods that take full advantage of this protected dry zone are:

(1) split side-dress applications of nitrogen fertilizers into the ridge shoulder and
(2) banded applications of herbicides over the row.

Disk furrowers move surface residues and weed seed to row middles.

How well will ridge tillage protect ground water across the Midwest, under different climatic, landscape, and soil conditions and crop rotations?

This was one of the key questions that researchers with the Management Systems Evaluation Area (MSEA) project set out to answer when they began their studies in 1990. Their primary objective was to gain a better understanding of the impact various farming practices have on water quality. Ridge tillage was selected as one of the key tillage systems to study because of its comparative advantages for soil and water conservation, as well as control of surface water and ground water quality. For water quality management, the sequence of operations and the distinct ridge provides some unique opportunities for improving the application of agrichemicals through better timing and placement, and the potential to greatly reduce herbicides and chemical fertilizers.

Since MSEA is a multi-state, multi-agency, cooperative program, it provided a unique opportunity to evaluate ridge-tillage at eight sites under different soil, topographic, and climatic conditions. For example, soils range from the fine-textured claypan soils on rolling terrain in Missouri to silt loam soils in Iowa and Ohio to coarse, sandy soils on flat terrain in Minnesota and Nebraska.

The purpose of this publication is to explain what ridge tillage is, how it is unique from other tillage methods, why it was selected for the MSEA studies, and how it has impacted water quality in the MSEA farming systems across the Midwest. First, you will learn what features make ridge tillage unique from other tillage systems and how researchers have taken advantage of these features to protect water quality. In particular, you'll learn how ridge tillage influences water movement, soil moisture and temperature. You'll also learn how ridge tillage systems at the eight MSEA sites affected water movement, water quality, crop yield and profitability over a five-year period (1991-1995). Although most of the information contained in this publication is from the MSEA studies, it also contains additional relevant information from around the Midwest.

HOW IS IT DIFFERENT?

WHAT IS RIDGE TILLAGE

What is ridge tillage and how is it different from other tillage methods?

Ridge tillage is a conservation tillage system with unique water flow patterns

Along with mulch till and no-till, ridge tillage is a conservation tillage system. This means at least 30 percent of the soil surface remains covered by residue after planting. Conservation tillage also results in less soil mixing. As defined by the Conservation Technology Information Center (CTIC), the soil in a ridge tillage system is left undisturbed from harvest to planting except for nutrient injection. Planting takes place on top of established ridges. Cultivation is used for weed control and to rebuild the ridges. Figure 1 shows how ridge tillage influences soil erosion and water movement. No-till has no tillage (except fertilizer injection) from harvest to planting. During this time the only operations that disturb the soil are planting and fertilizer application. However, if extreme weed pressure is not controlled with herbicides, some cultivation may be necessary to control the weeds. Mulch-till has at least one full-width tillage from harvest to planting. This may be with a chisel, sweep or disk, but not with a moldboard plow.

Ridge tillage has been proposed primarily as a conservation tillage system that is adapted to poorly-drained soils. Ridge tillage could also be an acceptable option for growers to reduce the risk of ground water pollution in other areas because water flow patterns in a ridge tillage system are ideally suited to band-applied herbicides and side-dressed nitrogen fertilizer applications. This is particularly true for sand plain areas that overlie shallow aquifers.

At planting, the top of the ridge (which is typically 4-6 in. higher than the surrounding soil) is removed with a sweep or row cleaner. The seed is then planted into the top of the ridge, which is cleared of any residue (this residue and loose soil ends up between the rows). This method (seed zone management) only disturbs about one-third of the soil surface at planting. Seed zone management facilitates specific operations that will be discussed more in the "Equipment" section.

This photo shows the bare ridges and corn stubble between the rows of this ridge till system. Stubble or crop residue protects the soil from wind and water erosion. Bare ridges warm up more quickly than the surrounding soil and speed up crop growth (during the early part of the growing season).

Weeds are controlled, and herbicide use is minimized by combining banded herbicide applications with subsequent cultivation. A herbicide applied in a band over the row controls weeds within the row (and reduces herbicide loadings by as much as two-thirds compared to broadcast applications). Cultivation is a dual-purpose operation that both controls weeds between the rows and rebuilds the ridges. Fertilizer is incorporated into the ridge along the side of the row.

Sometimes P and K are applied into the ridge before planting. Ridge rebuilding is less aggressive (less deep) with soybean than with corn to keep root pruning to a minimum.

When considering whether or not to adopt a ridge tillage system, a producer needs to be aware of the advantages and disadvantages that are inherent with ridge tillage (see Figure 1). By itself, ridge tillage provides several key benefits, namely reduced wind and water erosion and a warmer, drier seedbed. But these benefits can be enhanced even more by taking advantage of

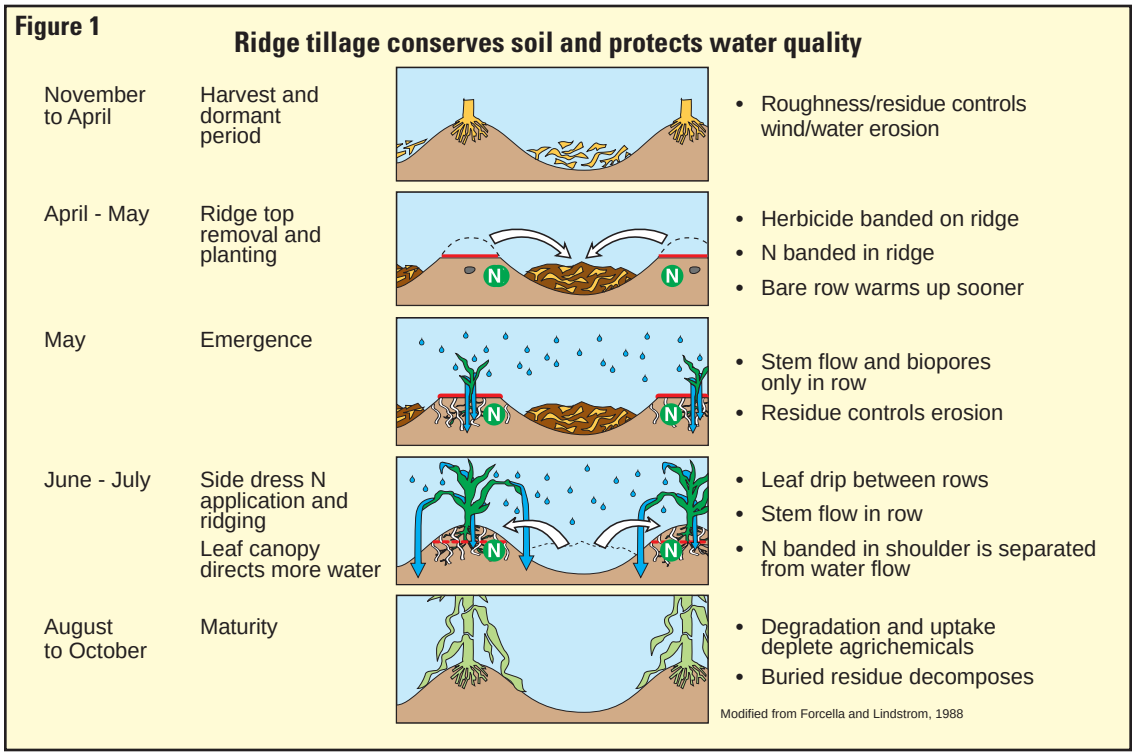

Figure 1. In ridge tillage systems, selective placement of agrichemicals, cultivation and ridge-forming operations combine to protect water quality. By protecting the soil from wind and rain, ridges and crop residue also conserve soil. At planting (second frame) herbicide is applied in a band over the row and starter fertilizer is applied to the ridge shoulder. At the four to six leaf stage, corn is cultivated to control weeds and the first application of nitrogen fertilizer is applied in the ridge shoulder (third frame). About two to three weeks later, or before the corn gets too tall to pass under the tractor, the corn is cultivated again, the second application of fertilizer is applied and the ridges are formed (fourth frame). In a ridge tillage system, the same ridges are formed year after year. It should also be noted that ridge tillage farmers use variations of this schedule depending on crop rotation, weather and personal choices of fertilizer and herbicide use.

Initially, the crop canopy does not protect the nitrogen fertilizer or herbicide applications on the ridge from rainfall (or irrigation) and potential leaching. As the crop grows, the canopy helps shield the ridge and chemical placements from rainfall and leaching. During June-August these agrichemicals are well sheltered by the crop canopy, which directs some water inward toward the main stem (stem flow) and the rest outward between the rows (leaf drip).

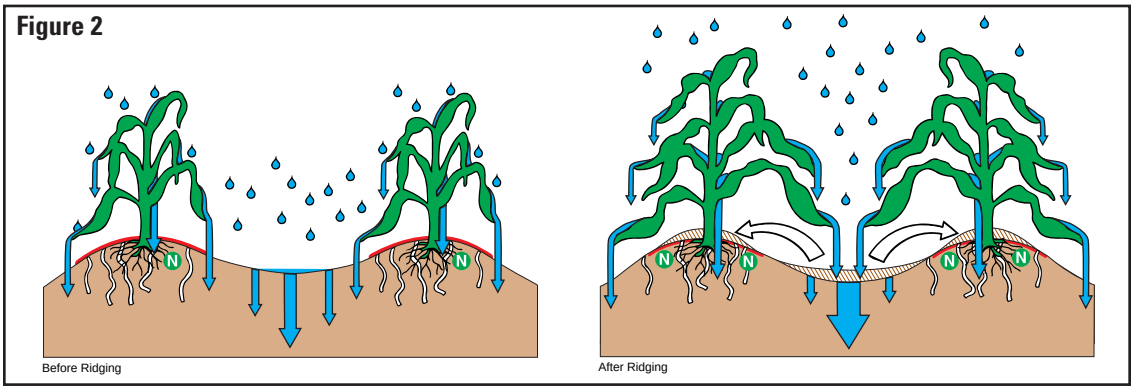

Figure 2. These diagrams illustrate nitrogen and herbicide placement relative to water flow patterns, crop canopy and worm tunnel/root channel/crack distribution in a ridge tillage system before and after ridging. Ridge shape, crop leaf canopy and tillage operations all interact to influence the distribution of water and macropores in soils with ridge tillage. Selectively placing nitrogen fertilizer on the ridge shoulder and herbicide in a 10-12 in. band over the row shelters them from much of the rainfall (and irrigation) and greatly reduces their potential to leach to ground water. Besides being sheltered from rain/irrigation, nitrogen placed in the ridge is also closer to the plant's actively growing roots and is taken up more quickly than nitrogen placed in the furrow.

In a ridge tillage system, the raised ridge takes full advantage of the fact that, as the crop's canopy develops, rainfall and irrigation water falling over the row follow two main paths. Some of the water will flow down the stem (stem flow) but most is diverted away from the ridge shoulder and drips into the interrow (leaf drip). As a result, agrichemicals that readily move with water (nitrate-N and atrazine) stay in the soil longer and are less likely to end up in ground water.

unique water flow patterns caused by the ridges and the crop canopy (Figure 2.). Several management practices capitalize on this canopy effect to separate water-soluble agrichemicals (such as nitrate-N in fertilizers and atrazine herbicides) from water flow paths. One of these practices involves applying nitrogen fertilizers in the ridge shoulder when it is needed, and in the amount needed. To increase efficiency and reduce potential for losses to ground water, corn is fertilized several times during the rapid growth stage instead of just once. Most ridge tillage farmers combine some N in a pre-plant, subsurface band and then apply the rest pre-plant or side-dress. Others apply several side-dress applications, typically referred to as **split side-dress nitrogen applications**. The other practice involves applying herbicides in a 10-12 in. band over the row, referred to as **banded herbicide applications.**

Because the crop field is a dynamic system, surface residues, crop canopies and water flow patterns change throughout the season (Figure 1). For example, tillage operations (especially the ridge-forming operation) change the shape of the ridges, redistribute residue and soil and disrupt earthworm tunnels and root channels. The developing leaf canopy affects water distribution as the season progresses. As the crop canopy develops, more water is diverted between the rows by a process called leaf drip (Figure 2).

Agrichemical placement, worm tunnel/root channel/crack distribution and water flow patterns in a ridge tillage system

In the Midwest, planting corn at the earliest possible date in the spring is an important factor for achieving better yields. But this presents a special challenge on colder, poorly-drained soils. The key is to warm up the seedbed more quickly, which can be accomplished through ridge tillage and fall strip till. Ridges dry out and warm up faster than flatter soils.

MANAGEMENT IN A RIDGE TILLAGE SYSTEM

Fertility and weed management in ridge tillage systems

Ridge tillage involves moving some soil during the growing season to the crop row. Because of this, managing nutrients (such as lime and immobile nutrients such as P and K) and weeds in a ridge tillage system presents some special challenges. At planting, the ridges are cut down about a half-inch and the residue (along with weed seeds) is moved to the furrows. This soil and residue is moved back to the ridge crest in June during the ridging operation. Sometimes this ridging operation is combined with a split application of nitrogen fertilizer.

Some ridge tillers use dry broadcast P and K and use the ridging operation to place the nutrient in the root zone for next year's planting. Many ridge tillers apply P and K with the planter so that placement is close to the seed.

To properly manage immobile nutrients (such as lime, P and K) in a ridge tillage system (or in any conservation tillage system), you need to be aware of several things:

- If adding lime, the lack of mixing can pose problems.
- If broadcast applied, P and K tend to become stratified in the upper one foot of soil.
- Ridge till corn can show K deficiencies even though soil test values show concentrations to be medium or high (this can also vary between corn varieties).

Tips for proper fertility management in a ridge-tillage system:

- Take proper representative soil samples by sampling in the ridge shoulder about 6 in. from the row at a depth of 6 to 8 in.;
- Apply P and K in a band in the existing ridges (below the seed) rather than broadcasting it.
- Give special attention to K use.
- Sample for deep nitrates where appropriate.

Conservation tillage practices such as no-till and ridge tillage usually decrease runoff and increase water infiltration, compared to conventional tillage.

Weed management in a ridge-tillage system depends on combining cultivation (to control weeds between the rows) with a banded herbicide application (to control weeds within the row). The opportunity to combine herbicides with cultivation provides producers with many options, including:

- preplant cultivation,
- burndown herbicides,
- preemergent (or residual) herbicides,
- postemergent herbicides, and
- the two required cultivations.

Roundup Ready soybean adds another option. In fact, one of the major reasons the original was developed was because of its weed control benefits. Many producers adopt ridge systems because of the mix and ease of weed control and the comfort they have with cultivation.

But just how well ridge-tillage and banded herbicide applications work in a particular area depends on soil type, weather, weed complexes (grasses vs. broadleaves) and crop rotation. For example, South Dakota researchers found that they needed to manage weeds on sandy, well-drained soils (mostly foxtails) differently than those on fine-textured and somewhat poorly-drained soils (Russian thistle and lambsquarters). Although a 12-in. herbicide band worked well to control foxtails at the sandy site, a wider band (15 in.) and an additional broadcast herbicide application to control thistle and lambsquarters was needed. Elsewhere in the Midwest, other researchers found that continuous corn production allows larger (and more diverse) weed populations to accumulate than corn rotated with another crop (e.g., corn-soybean). Many ridge tillage farmers use a rotary hoe to help control weeds. Others chose to apply herbicides to the entire field after planting instead of banding.

Factors for good weed management in a ridge tillage system:

- Tillage operations help move weed seeds around and stimulate germination. Removing the ridge top at planting eliminates most weed seeds from the row area. The ridging operation in June, may stimulate more weed germination on the ridges and in the furrow.
- If left untreated, perennial weeds may be more of a problem in ridge tillage systems than they are in other conservation tillage systems.
- Cultivation is an integral part of ridge tillage and is a very important primary weed control procedure.

FOR RIDGE TILLAGE

EQUIPMENT

Equipment considerations for ridge tillage systems

Tillage/planting tools: Their selection and adjustment to meet site-specific needs in ridge tillage systems

When discussing equipment requirements for ridge tillage systems, it is important to remember two things:

1. Equipment must be capable of either protecting or forming the ridge.
2. Ridge tillage systems are single-pass systems, where multiple operations are completed during each pass.

Ridge tillage is a single-pass system. The key is to combine as many operations as possible with each tillage pass (e.g., fertilize and control weeds; fertilize, control weeds and build ridges). To do this (and avoid damaging the ridges) a properly equipped and adjusted toolbar is critically important for each operation, which are:

- Planting;
- cultivating;
- ridge building; and
- fertilizing.

If a producer makes a poor pass, that's it! No more passes!

Planters

In ridge tillage systems, all seeding equipment needs to do three things:

1. cut and handle residue (row area is cleared with ridge-cleaning devices; see Figure 3)
2. penetrate soil to desired seeding depth (accomplished with weight, down pressure springs)
3. provide good seed-to-soil contact

To cut and handle residue, planters are equipped with ridge-cleaning devices that clear away crop residue but remove very little soil from the top of the ridge. Removing too much soil often forces the planter off the rows. Also, avoid removing root masses of the previous crop.

Ridge-cleaning devices include disk furrowers, steel spider wheels, wide sweeps and horizontal disks (Figure 3). All these row-cleaning devices should remove very little soil.

Disk furrowers:

- move surface residue and weed seed to row middles,
- larger diameter disks are more effective and plug less than smaller disks, and
- notched edges keep disks rotating at shallow depths.

Steel "spider" wheels

- move residue without moving soil, and
- work better than disk furrowers under wet conditions.

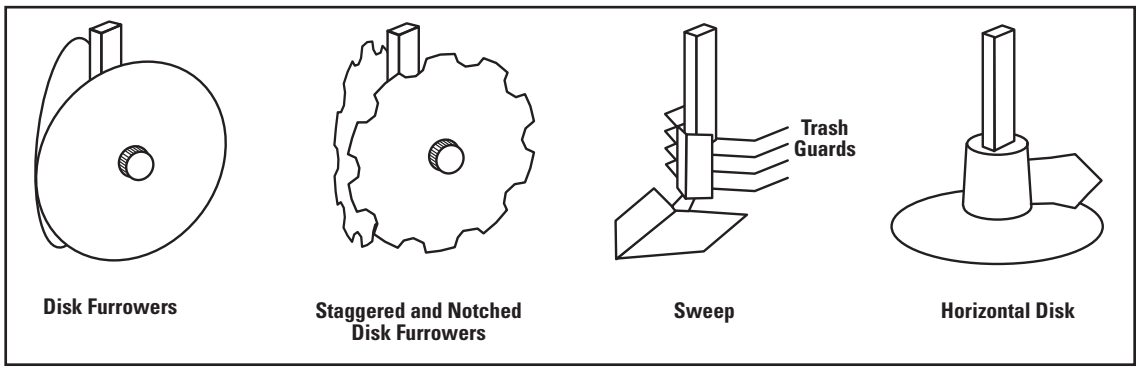

Figure 3. Source: Conservation Tillage Systems and Mangement, Midwest Plan Services, MWPS-45. First Edition, 1992.

Wide sweeps (with coulter)

- slides under the residue and moves it and some soil to the row middle, and
- work best if used with a deflector shield or trash guard.

Horizontal disk (with coulter)

- operates like a wide sweep
- an improvement over wide sweeps because the rotating action makes the disks self-cleaning and distributes wear around the disk perimeter rather than just the leading edge.

To achieve proper seeding depth a producer can either add more weight or down pressure springs to the planter. In general, try to set up the planter as heavy as possible. Adding weight on the wheels is one of the best ways to keep a planter on the row. In general, you need about 500 lb./row (or 6 x 500 lb. or 3,000 lb. for a six-row planter). Properly positioned wheels and a properly balanced planter are also important.

Stabilizing attachments may also be needed to keep the planter on the row. These consist of either coulters in front of ridge-cleaning attachments or large diameter coulters on the planter toolbar.

Good seed-to-soil contact is achieved with press wheels that pack the soil against the seed.

Cultivators

In a ridge tillage system, cultivation serves two purposes:

1. **control weeds** (primarily between the rows), and
2. **rebuild or shape ridges** for the next season.

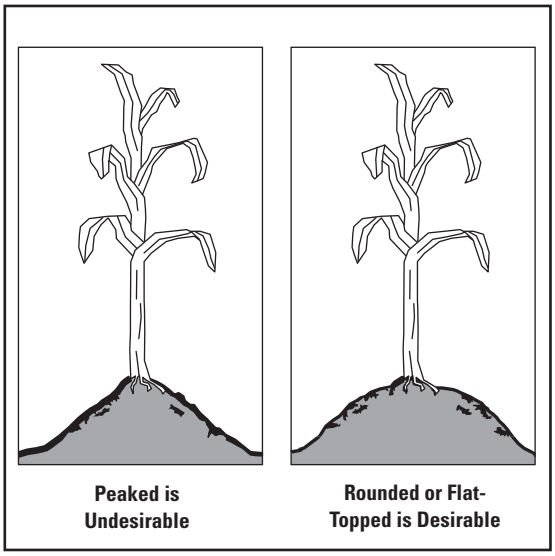

Figure 4. Source: Conservation Tillage Systems and Mangement, Midwest Plan Service, MWPS-45. First Edition, 1992

The first cultivation should be fairly deep to control weeds and loosen the soil; the second (or last) cultivation should both control weeds and build the ridge (rounded or flat-topped ridges are better than peaked ridges because they make planting easier; see Figure 4).

Depending on the site and field conditions, the combination of multiple operations per pass can vary considerably, so no two toolbars will have the same tools with the same settings. On any given toolbar, ridge-clearing tools, for example, may vary from large coulters to cup disks to slot openers to spider wheels (Figure 3).

TILLAGE SYSTEMS

OVERVIEW OF

Overview of tillage systems compared at eight MSEA sites

As part of the MSEA program, ridge tillage was evaluated for its impacts on water quality at eight sites across the Midwest (see map). Except in Ohio, researchers at each site compared a corn-soybean ridge tillage system with other tillage systems, such as moldboard plow, mulch till, no-till, or chisel plow. Ohio studied a corn-soybean-wheat/vetch ridge tillage system. At most sites ridge-tillage was combined with other practices (e.g., banding herbicides over the row, split applications of nitrogen fertilizer to the shoulder area of the ridge, and irrigation management) to enhance the system's ability to use inputs more efficiently and yet protect water resources. Key characteristics for each site are summarized in Table 1.

Table 1: Characteristics of MSEA ridge tillage studies at eight locations in the Midwestern Corn Belt. Researchers sampled ground water at least four times a year at all sites to monitor for nitrate-nitrogen and herbicides, particularly atrazine and alachlor. These samples gave researchers a much better idea of how management practices (such as ridge tillage, placement and timing of agrichemicals, and crop rotation) affect agrichemical movement over space and time.

Location	Geologic Setting	Dominant Texture of Soil Surface	Annual Precip. (inches)	Tillage System[1] and Crop Rotations[2] compared	Atrazine Application - Method[3] and Rate (Lb/A)	Potential for infiltration & percolation	Macropore Potential
Missouri	Loess with claypan over glacial till (Goodwater Creek)	Putnam-Mexico, Mexico, Silt loam	37	RT on C - S MT on C - S (high inputvs. low input)	banded (15/30) at 0.8 lb/A broadcast at 2.0 lb/A	VERY LOW	very high due to soil cracking
NE Iowa	Till plain, Karst	Kenyon loam	32	RT, NT, MT, MB on C - S RT, NT, CT, MB on C - C	None, Alachlor used instead broadcast at 2.5 lb/A	low	moderate
Ohio	Alluvial buried valley (Scioto River)	Silt loam to sandy loam	38	RT on C - S- wheat/vetch NT on C – S; MT after corn MT on C - C	banded (10/30) at 0.5 lb/A broadcast at 1.5 lb/A	Moderate to high	Moderate
South Dakota	Northern sand plain glacial outwash (Big Sioux aquifer)	Brandt silty clay loam	21	RT on C - S MT on C - S	banded (10/30) at 0.3 lb/A banded (10/30at 0.3 lb/A	high	high
Minnesota	Northern sand plain glacial outwash (Anoka Sand Plain)	Zimmerman fine sand	30	RT on C-S MT on C - C	banded (10/36) at 0.4 lb/A broadcast at 1.5 lb/A	moderate	none
North Dakota	Northern sand plain glacial outwash (Lake Dakota SandPlain)	Hecla loamy fine sand and Embden sandy loam	19	RT on C - S MT on C - C	banded (15/30) at 0.5 lb/A broadcast at 1.0 lb/A	moderate-high	slight
Wisconsin	Northern sand plain glacial outwash (Lower Wisconsin River Valley)	Sparta sand	31	RT on C - S NT on C - S MB on C - S	banded (10/30) at 0.8 lb/A broadcast at 0.9 lb/A	VERY HIGH	None
Nebraska	Silt loam over silt, sand, gravel (Platte River)	Silt loam	24	RT on C – C	Banded (18/30) at 1.0 lb/A	Moderate	slight

RT = ridge till, MT = (mulch till, full width chisel or disc), NT = no-till, MB = moldboard plow.
C - S indicates a corn-soybean rotation, C - C indicates continuous corn.
For banded applications, numbers in parentheses indicate band width/row width. For example, (10/36) indicates a 10-inch herbicide band over a 36-inch row width.

AT MSEA SITES

Ridge-tillage findings at the MSEA sites

Impacts on water movement and quality – Depending on soil properties and topography, water tends to either move overland to surface water (runoff) or infiltrate downward (percolate) to subsurface drainage water or ground water. For a number of reasons, tillage can greatly influence the amount of runoff and infiltration. By increasing one, you decrease the other. Protecting water resources by changing tillage practices can become a tradeoff between increasing the risk to ground water while decreasing the risk to surface water, and vice versa.

Conservation tillage practices such as no-till and ridge tillage usually decrease runoff and increase water infiltration, compared to conventional tillage. On fine-textured soils that have greater organic matter and clay content, this occurs due to a combination of increased surface residue and macropore networks. The Iowa MSEA site is a good example of a site where ridge tillage helped increase infiltration rates. At this site atrazine and nitrate-N losses to subsurface drainage water were highest under no-till and ridge till and lowest under the moldboard plow. On sandy soils, infiltration rates are typically high, and are less sensitive to increased surface residue. On these soils, crop residue helps reduce wind erosion and decrease soil water evaporation. Surface residue decreases crusting and surface sealing.

As we analyze the impact of ridge tillage on water movement, it is important to remember that soil type and topography usually dictate whether water moves overland to surface water, percolates to ground water, or percolates to the depth of the subsurface drainage system and is subsequently discharged to surface water.

For purposes of discussion, we can use clay content and organic matter in the surface soil to group the MSEA sites into two general groups. The first group includes three outwash sand plain sites:

- Wisconsin,
- Minnesota, and
- North Dakota.

In general, this group is characterized by sandy soils that have low clay (less than 4 percent) and organic matter (less than 2 percent) contents and overlie shallow aquifers. The second group, whose soils have a greater clay and organic matter content, includes five sites:

- Missouri,
- Iowa,
- South Dakota,
- Nebraska, and
- Ohio.

Minnesota, North Dakota and Wisconsin

Sand plain soils were evaluated at the Minnesota, North Dakota and Wisconsin sites. Although all of these sand plain sites are considered to be vulnerable to ground water contamination, researchers observed some interesting differences between them.

The Northern Corn Belt Sand Plains are characterized by highly permeable, sandy soils over shallow aquifers. But all sand is not the same, and the differences greatly affected water movement through the soil profile. The Minnesota site is located on the Anoka Sand Plain (ASP), with Zimmerman fine sand as the predominant soil type. The unsaturated zone generally consists of fine-to-medium sand, while the saturated zone generally consists of medium-to-coarse sand. Average depth to the water table is 12 ft. below the land surface. The North Dakota site is located over the Oakes Aquifer. Soil at this site consists of two types: Embden fine sandy loam and Hecla fine sandy loam. Depth to the surface of the aquifer is about 10 ft. The South Dakota site is located over the Big Sioux Aquifer on the flood plain of the Big Sioux River. This site is characterized by shallow soils, with Brandt silty clay loam as the predominant soil. Depth to the surface of the aquifer is about 15 ft.

Water movement – Based on soil organic matter and clay content, researchers expected infiltration and per-

colation to be the greatest in Wisconsin (which it was), followed by Minnesota and North Dakota. But this wasn't the case. Although water movement was the greatest through the coarse sands at Wisconsin (one inch of water percolated down about 40 in. in 12 hours), it was least at the Minnesota site (red and light blue bars in Fig. 5). The **North Dakota site** had an intermediate percolation rate (27 in. in 12 hours). This was more than twice as fast as the percolation rate at the **Minnesota site** (12 in. in 12 hours).

Why was the percolation rate so surprisingly slow at the Minnesota site?

The primary reason is a dense layer 12 to 15 in. below the surface. Thin bands of denser soil (called lamellae) 3 to 5 ft. below the soil surface also slowed water movement. These bands have greater clay content than the surrounding soil, which impedes the downward movement of water (and any water-soluble chemicals moving with it).

Water Quality — In Minnesota and North Dakota, neither farming system (corn-soybean ridge tillage system, continuous corn disk/chisel plow system) degraded water quality initially. But since April 1993 (third growing season) de-ethyl atrazine (DEA), a breakdown product of atrazine , has been detected in continuous corn at the Minnesota site. Since then concentrations of DEA at the water table have continued to increase, reaching a level of 3 ppb. In North Dakota, very little nitrate-N, atrazine or alachlor reached the ground water. In fact, neither atrazine nor alachlor moved deeper than 6 in. in the soil (none detected in ground water) and less than 15 percent of the amount applied remained after harvest. Even though soil tests showed that the amount of residual nitrate-N in the soil indicated a potential for nitrogen movement to ground water, it did not degrade the ground water under either tillage system. Still, the potential environmental risk of the ridge tillage system is lower than the mulch till system because of reduced

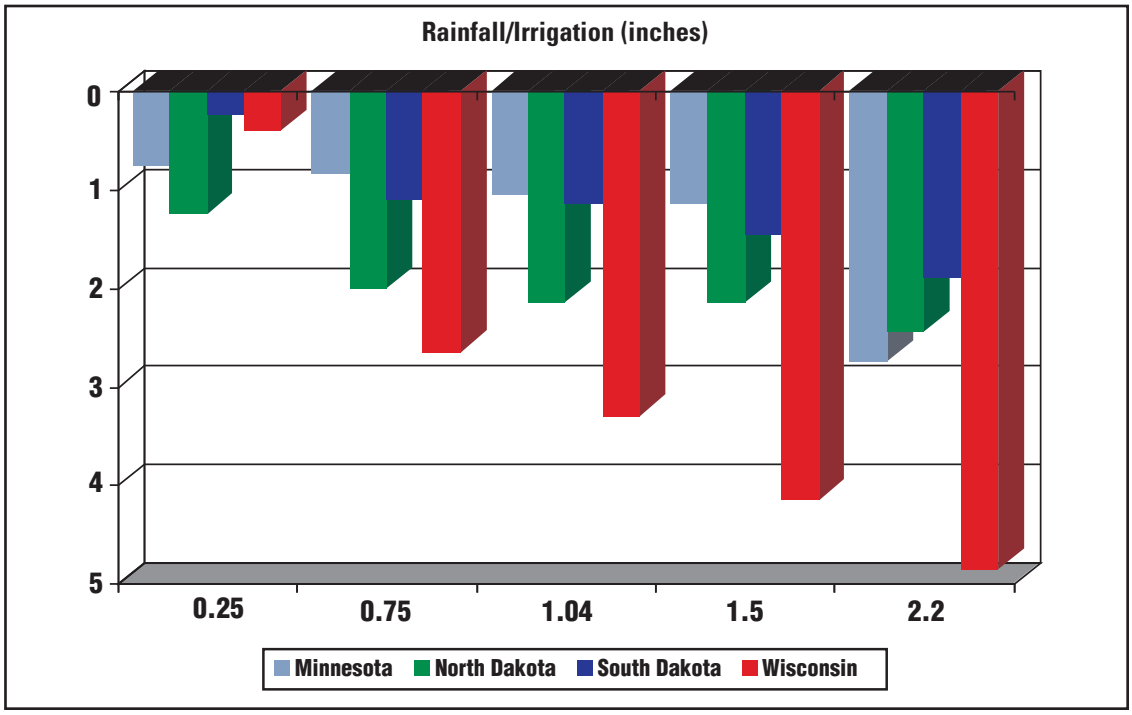

Figure 5. This graph shows differences in percolation rates at all four sites of the Northern Cornbelt Sand Plain MSEA. Each cluster of bars shows how deep a given amount of water (from 0.25 in. to 2.20 in.) percolated through the soil after 12 hours. For example, 1.04 in. of water (center cluster of bars) penetrated more than 3 ft. in the Wisconsin soil (red bars), but only about 1 ft. in the Minnesota soil (light blue bars). The clay content of the Wisconsin soil ranged from 2.5 percent at the surface to less than 0.5 percent 40 in. down, while the Minnesota soil had 3 to 4 percent clay at 40 in.

chemical usage (50 percent less pre-emergence herbicide and 40 percent less N fertilizer used) and better N use efficiency.

Ridge tillage at the Wisconsin site had the greatest impact on improving water quality, especially for nitrate-N. As a result of selectively placing split applications of N fertilizer in the shoulder of the ridge, nitrate-N concentrations in the ground water were reduced. Movement of atrazine into ground water was also less under ridge-tillage than under the no-till or moldboard plow systems. Even when atrazine was detected, levels rarely exceeded 1 ppb.

Profitability — Ridge tillage systems were also the most profitable at the North Dakota and Wisconsin sites. In North Dakota, the ridge tillage corn-soybean (with a net return of $69/A) was more profitable than the continuous corn mulch till system (with a net return of $30/A). However, the corn-soybean rotation is not recommended under irrigated conditions because of the buildup of white mold. Under irrigated conditions, soybean should only be planted once every four years. At Wisconsin, the four-year average corn yield for the corn-soybean ridge tillage system at 128 Bu/A was the highest yielding of the three systems tested. The five-year corn yield averages for the corn-soybean moldboard plow system and the corn-soybean no-till system were 128 Bu/A and 111 Bu/A, respectively.

South Dakota

South Dakota researchers compared ridge tillage with a chisel-based mulch till system on a corn-soybean rotation. What researchers found was that tillage had little or no impact on water movement or water quality; atrazine detections rarely exceeded 1 ppb.

Weed control — South Dakota researchers also evaluated the impact of different weed control methods and tillage systems at two locations with different soil types. Soil at the Centerville site is a loam, which drains well and often allows producers to cultivate the day after a rain. However, the soil at the Aurora site is a silty clay loam, which drains much slower than the loam and prevents producers from cultivating until three to four days after a rain. In addition to drainage characteristics, the sites also differed in their weed complexes. Grasses were the predominant weed problem at the well-drained Centerville site while broadleaves such as kochia and redroot pigweed were predominant on the slower draining soils of the Aurora site.

Because it took longer to get on the Aurora site to cultivate after a rain than the Centerville site, the Aurora site was much more prone to weed control problems resulting from cultivation delays. These delays resulted in larger weeds that were not as efficiently controlled by tillage and these remaining weeds (mostly broadleaves) significantly reduced corn yields in the banded treatments two of the three years of the study at Aurora.

In ridge-tillage systems using band-applied herbicides, good weed control in the untreated inter-row areas depends on timely secondary cultivations. But, as we observed in this study, both the soil type and weed species can have a major impact on the effectiveness of these cultivations and, ultimately, on yield. That's why it's important to consider both the soil type and the weed species involved prior to using banding techniques, instead of broadcast herbicides, in any tillage system.

Iowa

Researchers in Iowa compared ridge tillage to three other tillage systems on both a corn-soybean rotation and continuous corn. They observed that peak flows from the subsurface drainage system under the ridge tillage and no-till systems after storms were higher than flows from the subsurface drains under the moldboard and chisel plow systems. Why the difference? The answer lies with the formation of worm tunnels and root channels (macropores) and the effect tillage has on them (see Figure 2).

Water movement – Worm tunnels, root channels and cracks form in soils that have enough organic matter to support worm populations and enough clay content (such as Iowa's silt loam soils) to maintain the structure of the macropore networks. In addition to aerating the soil, these networks also help channel water downward more quickly (via a process called macropore flow). However, these macropore networks are disturbed – and their ability to move water downward is restricted – by more

aggressive tillage activities such as moldboard or chisel plowing. That's why less water percolated down through the soil and into the tile lines under the moldboard and chisel plow fields than did under the ridge tillage and no-till systems. Conversely, ridge tillage and no-till favored increased percolation rather than surface runoff primarily because worm tunnels and root channels were less disturbed by tillage activities.

Water Quality – Tillage played the biggest role in the amount of water entering the subsurface drains, but cropping sequence had the biggest impact on the amount of nitrate-N and atrazine in the subsurface drainage waters. Cropping sequence also dictated whether or not tillage (any tillage) had an impact on nitrate-N and atrazine concentrations in the drainage water. For example, in a corn-soybean rotation, ridge tillage had little or no effect on nitrate-N concentrations in subsurface drainage water. But when corn was grown continuously, both the ridge tillage and no-till systems had larger losses of nitrate-N to drainage water than moldboard plow or mulch till systems (due to greater macropore flow). These losses were about 20 percent of the amount applied. Likewise, atrazine and alachlor also showed up more quickly (and in higher concentrations) in subsurface drainage water following a rainfall under the higher input systems such as continuous corn. Herbicide losses into the tile were about 0.5 percent of the amount applied.

Nebraska

Nebraska MSEA researchers evaluated a ridge tillage system on continuous corn at two sites. Other researchers at the University of Nebraska also conducted an eight-year study on the impacts of ridge tillage and several other tillage methods (disk plant and slot plant) on both continuous corn and a corn-soybean rotation. Compared to disk plant, ridge tillage used nitrate-N more efficiently and had less residual nitrate-N in the soil. Because corn used N more efficiently in the ridge tillage system than a disk plant system, ridge tillage yields were consistently higher than disk plant yields.

Ohio

The ridge tillage system studied in Ohio was a corn-soybean-wheat/vetch cropping system,

One way to increase nitrogen use efficiency and reduce leaching is to apply nitrogen fertilizer to corn when it is needed most (called split applications). Potential contamination due to leaching can be reduced even more by applying this nitrogen fertilizer to the ridge shoulder (inset).

which was compared to a corn-soybean no-till system, with mulch till after corn, and a continuous corn system with mulch till. The soils predominantly have a silt loam and sandy loam surface texture, with clay content ranging between 8 and 30 percent, and organic C ranging between 0.4 and 2 percent. The clay and organic C contents decreased dramatically at 2 to 3 ft. in depth, where the dominant soil textures were sandy loam, loamy sands and sand. Precipitation at the site ranged between below normal and normal for the five-year period 1991-1995. A large percentage of the precipitation enters the soil; runoff has not been observed at this site.

Water quality — Even with the moderate to high potential for infiltration and percolation at this site, the Ohio researchers did not find any significant differences in water movement or water quality between these three systems. Of the 10,000 water samples collected over five years from the ground water underlying these systems, no samples contained detectable amounts of the herbicides atrazine, alachlor, or metribuzin. The maximum concentration of nitrate-N detected in the aquifer for the period 1994-1996 was 7.6 ppm, with a mean annual concentration of less than 2 ppm under each of the three tillage systems.

Profitability — In Ohio, the corn-soybean-wheat/vetch ridge tillage system was compared to a corn-soybean no-till system, and a continuous corn system with mulch till. Ohio results suggest that the no-till system produced the highest net returns, followed by the ridge tillage and mulch till systems. Corn and soybean yields in Ohio were not significantly different among the three systems.

Ohio researchers used linear programming techniques to consider system profitability when each tillage system is expanded to fully utilize the existing machinery component. In this analysis, the system was constrained to 655 acres, whereas the no-till and ridge tillage systems allow production of substantially more acreage – 868 and 826, respectively. [Although nitrogen was not applied to the wheat phases of the ridge tillage system in the field research, a 70 lb. rate of N was used on wheat for the linear programming analysis.] At these full-capacity farm sizes, per acre net returns were $15.82 for mulch till, $67.52 for no-till, and $68.08 for ridge tillage. Note, however, that total farm net returns for no-till exceeded those of ridge tillage by about $2,000 because of the additional acreage capacity of that system.

Missouri

There are about 10 million acres of claypan soils in Missouri and Illinois. These soils have a silt-loam at the surface, but have a high montmorilinitic clay sub-soil horizon about 10 to 15 in. below the soil surface. When this claypan horizon gets wet, it greatly restricts water flow (infiltration rate). Because rainfall rate exceeds the infiltration rate for the majority of the year, most of the rain runs off. About one-third of the annual precipitation leaves the field as runoff.

Water Movement and Quality – By comparing a ridge tillage system with mulch till system on claypan soils, Missouri researchers observed no significant differences in water infiltration or in water quality beneath the two systems. In terms of the amount of nitrate-N leached, 10 lb./acre leached from the ridge tillage system and 7 lb./acre leached from the mulch till system during the 1993-1994 growing season; this amounted to 8.7 percent and 6.8 percent of the nitrogen applied to each system.

Because Missouri's claypan soils shrink and crack when they dry out, herbicides and nitrate-N have the potential to penetrate deeply into the soil by following these cracks (this is called preferential flow). Therefore, the highest potential for ground water contamination will occur from heavy rains falling on dry, cracked soils, especially if these rains fall within a few weeks of herbicide or fertilizer applications. Conversely, the highest potential for contamination of surface waters will occur when rain falls on tight, moist soils. But even though the rate of infiltration can be high under the right conditions, most of the water that falls on Missouri's claypan soils runs off into surface waters rather than infiltrating into the soil. However, the water that does move into the fine pores of the surface soil "dries out" very slowly, frequently making post-plant field access very difficult.

Management systems like ridge-tillage are risk-prone on poorly-drained claypan soils. Since erratic weather conditions may prevent cultivation, many producers are unwilling to risk using weed control practices typical of a ridge-tillage system, a system that relies on a combination of cultivation and band-applied herbicides. Surveys helped to confirm and quantify these feelings. They showed that 41 percent of the producers in the claypan soil region of Missouri who had tried herbicide banding plus cultivation (in a ridge-tillage system) for weed control have stopped and have no plans to retry the practice again. Barriers to adoption of herbicide banding included time and labor requirements, custom labor constraints, loss of control over operation, and potential risks to yield and profitability.

Model projections showed that although alternative farming systems and practices improved surface and ground water quality, they also reduced farm profitability. Therefore, it's unlikely that farmers will adopt alternative farming systems to protect water quality unless they're offered financial incentives such as cost sharing or green payments.

SUMMARY AND RECCOMENDATIONS

Summary and Recommendations

Because of its agronomic and environmental benefits, ridge tillage systems have considerable potential to help enhance both agricultural profitability and environmental quality. By evaluating ridge tillage systems across eight Corn Belt locations, the MSEA project has shown the impacts of these systems on water quality across a range of different soils, topographies and climates. In doing so, they have provided excellent documentation of the positive impacts ridge tillage systems have on the environment, particularly water quality.

By itself, the practice of ridge tillage provides a number of the agronomic (warmer, drier seedbeds which usually mean higher yields) and environmental benefits (less water and wind erosion because of more crop residue). But when ridge tillage is combined with certain cropping sequences and the selective placement of agrichemicals, the environmental benefits (especially for protecting ground water quality) are even greater. By evaluating ridge tillage "systems," rather than the practice of ridge tillage by itself, these studies show how other factors – particularly cropping sequence, soil type, timing and placement of agrichemicals – work in concert to influence how ridge tillage impacts water quality.

Impacts of cropping sequences and ridge tillage on water quality – Of all the factors that influence the impacts ridge tillage has on water quality, cropping sequence is probably the most important. After all, cropping sequence is usually the primary determinant of the amount of agrichemicals applied over any given period of time. Simply switching from continuous corn to a corn-soybean rotation will reduce herbicide inputs by at least half, possibly more with nitrogen fertilizers. But when ridge tillage is used in combination with a corn-soybean cropping sequence, the environmental benefits are even greater than the benefit of either one alone. Doing so reduces loadings, increases nitrogen use efficiency and lowers leaching rates even more.

Impacts of selectively placing agrichemicals in a ridge tillage system – In a ridge tillage system, both the shape of the ridge and the crop canopy interact and combine to redirect water and create a "dry zone" on the ridge shoulder. These flow patterns change over time. Early in the season – before the leaf canopy develops – rainfall and irrigation water falls fairly evenly across the ridges and valleys (the ridge shoulder is not sheltered at this point). This water then flows off the ridges and into the valleys. However, as the crop matures, the developing leaf canopy begins to act like an umbrella and diverts an increasing amount of water toward the valley or interrow area.

This "dry zone" provides an opportunity to separate agrichemicals (such as nitrogen fertilizer and atrazine) from most of the water that flows over and through the soil. Separating agrichemicals from water flows can be accomplished by applying atrazine and alachlor in a band over the row and by split applications of nitrogen fertilizer in the shoulder of the ridge. These practices are especially important on the Sand Plain sites in Wisconsin, North Dakota and Minnesota, where water infiltration and leaching are of major importance and concern.

Selective placement allows producers to further enhance the environmental benefits of ridge tillage. Applying split applications of nitrogen fertilizer into the relatively dry ridge shoulder as needed not only shelters the nitrogen from most of the rain (especially by early to mid summer), it also puts it in close to the corn roots where it's readily available and at the times when it's needed most. Increased efficiency is evident through greater corn yields and less leaching. MSEA studies show that when nitrogen fertilizer is applied into the ridge shoulder, leaching of nitrate-N to surficial aquifers is reduced significantly. This was particularly true at the Wisconsin site, where selective placement of split applications of N fertilizer in the shoulder of the ridge consistently reduced nitrate-N concentrations in the ground water.

In the case of atrazine, banded applications in a ridge tillage corn-soybean rotation at the MSEA sites achieved acceptable weed control while reducing herbicide loading rates by 30 to 60 percent.

Impact of soil type on water movement in ridge tillage systems – Although the shape of the ridges and the crop canopy certainly play key roles in influencing water distribution and flow, they don't completely dictate how water moves in a ridge tillage system. Soil type, and the types of structures it will support, can also play a major role in water movement. As MSEA researchers discovered, worm tunnels, root channels, and cracks (macropore networks) can greatly accelerate the downward movement of water by a process called preferential flow. However, these macropore networks are not found in all soils. Furthermore, if they are present, they can be sealed off from the surface by tillage.

If the soil has enough organic matter and clay content to support macropore networks, then the kind of tillage used and the effect it has on macropore networks and infiltration and percolation rates becomes important. This was shown on the rich, silt loam soils in Iowa, where atrazine and nitrate-N losses to drainage water in the tile lines were highest under no-till and ridge till and lowest under the moldboard plow. This occurred because ridge till and no-till left most of the macropores intact (which allowed more infiltration and percolation via preferential flow), whereas moldboard plowing or chisel plowing sealed off the macropores a few inches below the soil surface (which decreased infiltration and percolation but increased surface runoff). Therefore, on soils with macropore networks, it appears that it's also important to separate agrichemicals from these macropore networks. In contrast, the soils of the sand plain sites in Minnesota, North Dakota and Wisconsin have very low organic matter and clay contents. Because of this, the potential formation of macropores is slight (in North Dakota) to nonexistent (in Minnesota and Wisconsin).

Impacts of ridge tillage systems on yield and profitability – In addition to agronomic and environmental benefits, ridge tillage was also shown to increase yield and profitability. At the North Dakota, Iowa and Wisconsin sites, the combination of ridge tillage and the corn-soybean rotation clearly increased crop yield and profitability. At the Iowa and Minnesota sites, the increased yields were attributed primarily to a rotation effect. At the South Dakota site, yields from the ridge till system were comparable to the chisel plow system. At Missouri, ridge tillage yields were comparable to mulch till yields. In Ohio, yields and profits were essentially equal for the ridge tillage and no-till systems, although profits were significantly greater for ridge tillage relative to the mulch till system.

CONCLUDING REMARKS

Concluding remarks

Even though ridge tillage systems are difficult for some producers, some of the things learned from the MSEA studies can be transferred to other conservation tillage systems. These include the important roles that cropping sequence and chemical rate and placement play in reducing loading rates and ultimately reducing the leaching potential of agrichemicals. By themselves, each factor helps contribute to protecting water quality. But when all these strategies are applied and integrated into a ridge tillage farming system, the efficiency of agrichemicals can be maximized and their risk of leaching minimized.

Results from the four sand plain sites suggest that ridge tillage systems with banded herbicide applications and split applications of nitrogen fertilizer on the ridge shoulder would be an acceptable option for growers in the Northern Corn Belt to reduce the risk of ground water pollution and maintain yields in areas that overlie shallow aquifers.

Contributors and Contacts for further information

University of Minnesota
Dept. of Soil, Water and Climate
439 Borlaug Hall
1991 Upper Buford Circle
St. Paul, MN 55108-6028
Phone: 612-625-1244
Fax: 612-625-2208

Bruce Giebink, MSEA Education Coordinator
Phone: 612-625-4749
Internet: bgiebink@soils.umn.edu

Ray Allmaras, Soil Scientist
USDA-ARS-MWA
Soil and Water Management Research Unit
Phone: 612-625-1742
Internet: allmaras@soils.umn.edu

Jim Anderson, Extension Soil Scientist
Phone: 612-625-8209
Internet: jandersn@soils.umn.edu

Robert Dowdy, Area Research Leader
USDA-ARS-MWA
Soil and Water Management Research Unit
Phone: 612-625-7058
Internet: bob.dowdy@soils.umn.edu

John Lamb, Extension Soil Scientist
Phone: 612-625-1772
Internet: jlamb@soils.umn.edu

George Rehm, Extension Soil Scientist
Phone: 612-625-6210
Internet: grehm@soils.umn.edu

North Dakota State University
Dept. of Soil Science
Walster Hall
North Dakota State University
Fargo, ND 58105

Ray Knighton, Agricultural Engineer
Phone: 701-231-8577
Fax: 701-231-7861
Internet: knighton@nodak.edu

Tom Scherer, Extension Agricultural Engineer
North Dakota State University
Box 5626, Fargo, ND, 58105-5626
Phone: 701-231-7239
Fax: 701-231-1008
Internet: tscherer@ndsuext.nodak.edu

Walt Albus
P.O. Box 531
Oakes, ND 58474
Phone: 701-742-2189
Fax: 701-742-2700

South Dakota State University
Dept. of Plant Sciences
South Dakota State University
Brookings, SD 57007

David Clay
Phone: 605-688-5081
Fax: 605-688-4452
Internet: clayd@urmail.sdstate.edu

Sharon Clay
Phone: 605-688-4757
Fax: 605-688-4452
Internet: clays@mg.sdstate.edu

University of Wisconsin
Soil Science Dept.
1525 Observatory Drive
Madison, WI 53706-1299

Birl Lowery, Soil Scientist
Phone: 608-262-2752
Fax: 608-265-2595
Internet: lowery@calshp.cals.wisc.edu

Iowa State University
Department of Agronomy and National Soil Tilth Lab
Iowa State University
Ames, IA 50011-1010

Jerry Hatfield
USDA-ARS-NSTL
National Soil Tilth Lab
2150 Pammel Drive
Ames, IA 50011-4420
Phone: 515-294-5723
Fax: 515- 294 8125
Internet: hatfield@nstl.gov

Jerry Miller,
Dept. of Agronomy
2104 Agronomy Hall
Phone: 515-294-4333
Fax: 515-294-9985
Internet: x1wqual@exnet.iastate.edu

University of Missouri
USDA-ARS
Cropping Systems and Water Quality Research Unit
Columbia, MO 65211
Phone: 573-882-1138

Newell Kitchen
Phone: 573-882-1138
Fax: 573-882-1115
Internet: Kitchenn@missouri.edu

Eugene Alberts
Phone: 573-882-1144
Fax: 573-882-1115
Internet: albertse@missouri.edu

University of Nebraska
Biolog. Sys. Engr. Dept
230 L.W. Chase Hall
Lincoln, Nebraska 68583-0726

Darrell Watts
Phone: 402-472-5814
Fax: 402-472-6338
Internet: bsen032@unlvm.unl.edu

Dean Eisenhower
Phone: 402-472-1637
Fax: 402-472-6338
Internet: bsen009@unlvm.unl.edu

Paul Jasa
Phone: 402-472-6715
Fax: 402-472-6338
Internet: bsen023@unlvm.unl.edu

The Ohio State University
Dept. of Food, Agricultural, and Biological Engineering
590 Woody Hayes Drive
The Ohio State University
Columbus, OH 43210-1057

Larry C. Brown, Associate Professor
Phone: 614-292-3826
Fax: 614-292-9448
Internet: brown.59@osu.edu

Andrew D. Ward, Professor
Phone: 614-292-9354
Fax: 614-292-9448
Internet: Ward.2@osu.edu

Nathan Watermeier
Phone: 614-688-3442
Fax: 614-292-3747
Internet: watermeier.2@osu.edu

Randall C. Reeder, Associate Professor
Phone: 614-292.6648
FAX: 614-292-9448
Internet: reeder.1@osu.edu

Dept. of Agricultural, Environmental, and Developmental Economics
2120 Fyffe Road
The Ohio State University
Columbus, OH 43210-1067

Marvin T. Batte, Professor
Phone: 614-292-6406
Fax: 614-292-7710
Internet: Batte.1@osu.edu

Piketon Research and Extension Center
The Ohio State University
1864 Shyville Road
Piketon, OH 45061

Peter Bierman, Research & Extension Associate
Phone: 740-289-2071
Fax: 740-289-4571
Internet: bierman.2@osu.edu

USDA-ARS
Soil Drainage Research Unit
590 Woody Hayes Drive
Columbus, OH 43210-1057

Norman R. Fausey, Research Leader
Phone: 614-292-9806
Fax: 614-292-9448
Internet: Fausey.1@osu.edu

University of Kentucky
Dept. of Biosystems and Agricultural Engineering
105 Engineering Building
University of Kentucky
Lexington, KY 40546-0276

Steve Workman
Phone: 606-257-3000
Fax: 606-257-5671
Internet: sworkman@bae.uky.edu

Sue Nokes
Phone: 606-257-3000
Fax: 606-257-5671
Internet: snokes@bae.uky.edu